Computer Science & Engineering 423/823 Design and Analysis of Algorithms

Lecture 10 — NP-Completeness (Chapter 34)

Stephen Scott and Vinodchandran N. Variyam

Introduction

- So far, we have focused on problems with "efficient" algorithms
- I.e., problems with algorithms that run in polynomial time: $O(n^c)$ for some constant $c \geq 1$
  - Side note 1: We call it efficient even if c is large, since it is likely that another, even more efficient, algorithm exists
  - Side note 2: Need to be careful to speak of polynomial in **size** of the input, e.g., size of a single integer k is $\log k$, so time linear in k is exponential in size (number of bits) of input
- But, for some problems, the fastest known algorithms require time that is **superpolynomial**
  - Includes sub-exponential time (e.g., $2^{n^{1/3}}$), exponential time (e.g., 2^n), doubly exponential time (e.g., 2^{2^n}), etc.
  - There are even problems that cannot be solved in *any* amount of time (e.g., the "halting problem")
- We will focus on **lower bounds** again, but this time we'll use them to argue that some problems probably don't have **any** efficient solution

P vs. NP

- Our focus will be on the **complexity classes** called P and NP
- Centers on the notion of a **Turing machine** (TM), which is a finite state machine with an infinitely long tape for storage
  - Anything a computer can do, a TM can do, and vice-versa
  - More on this in CSCE 428/828 and CSCE 424/824
- P = "deterministic polynomial time" = set of problems that can be solved by a **deterministic TM** (deterministic algorithm) in poly time
- NP = "nondeterministic polynomial time" = the set of problems that can be solved by a **nondeterministic TM** in polynomial time
  - Can loosely think of a nondeterministic TM as one that can explore many, many possible paths of computation at once
  - Equivalently, NP is the set of problems whose solutions, if given, can be **verified** in polynomial time

P vs. NP Example

- Problem HAM-CYCLE: Does a graph $G = (V, E)$ contain a **hamiltonian cycle**, i.e., a simple cycle that visits every vertex in V exactly once?
  - This problem is in NP, since if we were given a specific G plus the yes/no answer to the question plus a **certificate**, we can verify a "yes" answer in polynomial time using the certificate
    - Not worried about verifying a "no" answer
  - What would be an appropriate certificate?
  - Not known if HAM-CYCLE $\in$ P

P vs. NP Example (2)

- Problem EULER: Does a directed graph $G = (V, E)$ contain an **Euler tour**, i.e., a cycle that visits every edge in E exactly once and can visit vertices multiple times?
  - This problem is in P, since we can answer the question in polynomial time by checking if each vertex's in-degree equals its out-degree
  - Does that mean that the problem is also in NP? If so, what is the certificate?

NP-Completeness

- Any problem in P is also in NP, since if we can efficently solve the problem, we get the poly-time verification for free
  $\Rightarrow$ $P \subseteq NP$
- Not known if $P \subset NP$, i.e., unknown if there exists a problem in NP that's not in P
- A subset of the problems in NP is the set of **NP-complete** (NPC) problems
  - Every problem in NPC is at least as hard as all others in NP
  - These problems are believed to be intractable (no efficient algorithm), but not yet proven to be so
  - If any NPC problem is in P, then P = NP and life is glorious ☺ and a little bit scary (e.g., RSA public key algorithm would break)

Proving NP-Completeness

- Thus, if we prove that a problem is NPC, we can tell our boss that we cannot find an efficient algorithm and should take a different approach
  - E.g., approximation algorithm, heuristic approach
- How do we prove that a problem B is NPC?
  1. Prove that $B \in$ NP by identifying certificate that can be used to verify a "yes" answer in polynomial time
     - Typically, use the obvious choice of what causes the "yes" (e.g., the hamiltonian cycle itself, given as a list of vertices)
     - **Need to argue that verification requires polynomial time**
     - The certificate is **not** merely the instance, unless $B \in$ P
  2. Show that B is as hard as any other NP problem by showing that if we can efficiently solve B then we can efficiently solve all problems in NP
- First step is usually easy, but second looks difficult
- Fortunately, part of the work has been done for us ...

Reductions

- We will use the idea of an efficient **reduction** of one problem to another to prove how hard the latter one is
- A reduction takes an instance of one problem A and transforms it to an instance of another problem B in such a way that a solution to the instance of B yields a solution to the instance of A
- **Example:** How did we prove lower bounds on convex hull and BST problems?
- Time complexity of reduction-based algorithm for A is the time for the reduction to B plus the time to solve the instance of B

Decision Problems

- Before we go further into reductions, we simplify our lives by focusing on **decision problems**
- In a decision problem, the only output of an algorithm is an answer “yes” or “no”
- I.e., we’re not asked for a shortest path or a hamiltonian cycle, etc.
- Not as restrictive as it may seem: Rather than asking for the weight of a shortest path from i to j, just ask if there exists a path from i to j with weight at most k
- Such decision versions of *optimization problems* are no harder than the original optimization problem, so if we show the decision version is hard, then so is the optimization version
- Decision versions are especially convenient when thinking in terms of languages and the Turing machines that accept/reject them

Reductions (2)

- What is a reduction in the NPC sense?
- Start with two problems *A* and *B*, and we want to show that problem *B* is at least as hard as *A*
- Will **reduce** *A* to *B* via a **polynomial-time reduction** by transforming *any* instance α of *A* to *some* instance β of *B* such that
  1. The transformation **must** take polynomial time (since we're talking about hardness in the sense of efficient vs. inefficient algorithms)
  2. The answer for α is "yes" **if and only if** the answer for β is "yes"
- If such a reduction exists, then *B* is at least as hard as *A* since if an efficient algorithm exists for *B*, we can solve any instance of *A* in polynomial time
- Notation: $A \leq_{\mathsf{P}} B$, which reads as "*A* is no harder to solve than *B*, modulo polynomial time reductions"

Reductions (3)

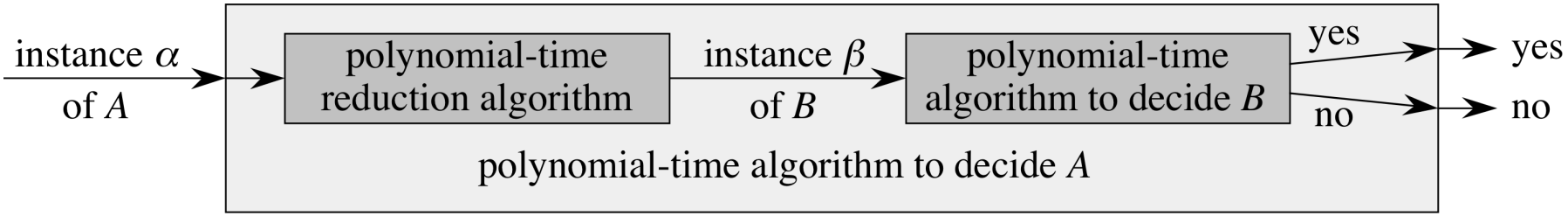

- Same as reduction for convex hull (yielding CHSort), but no need to transform solution to B to solution to A
- As with convex hull, reduction's time complexity must be strictly less than the lower bound we are proving for B's algorithm

Reductions (4)

- But if we want to prove that a problem B is NPC, do we have to reduce to it *every* problem in NP?
- No we don't:
  - If another problem A is known to be NPC, then we know that any problem in NP reduces to it
  - If we reduce A to B, then any problem in NP can reduce to B via its reduction to A followed by A's reduction to B
  - We then can call B an **NP-hard** problem, which is NPC if it is also in NP
  - Still need our first NPC problem to use as a basis for our reductions

CIRCUIT-SAT

- Our first NPC problem: CIRCUIT-SAT
- An instance is a boolean combinational circuit (no feedback, no memory)
- Question: Is there a **satisfying assignment**, i.e., an assignment of inputs to the circuit that satisfies it (makes its output 1)?

CIRCUIT-SAT (2)

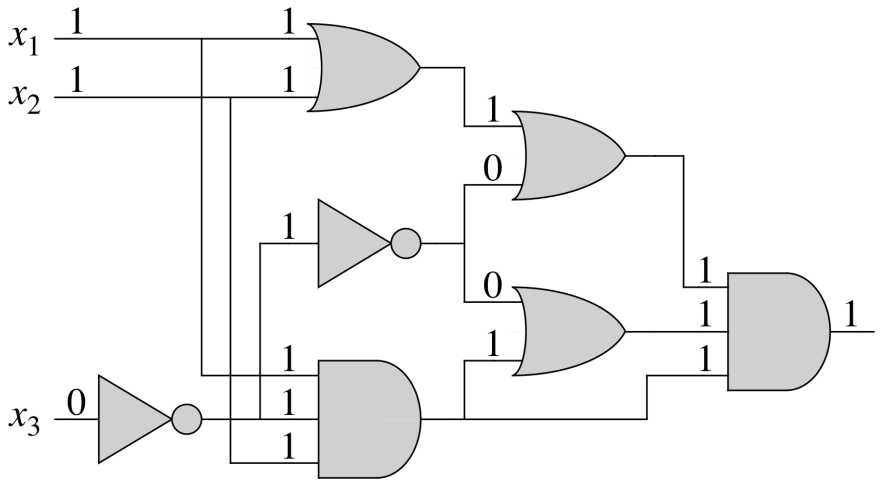

(a)

Satisfiable

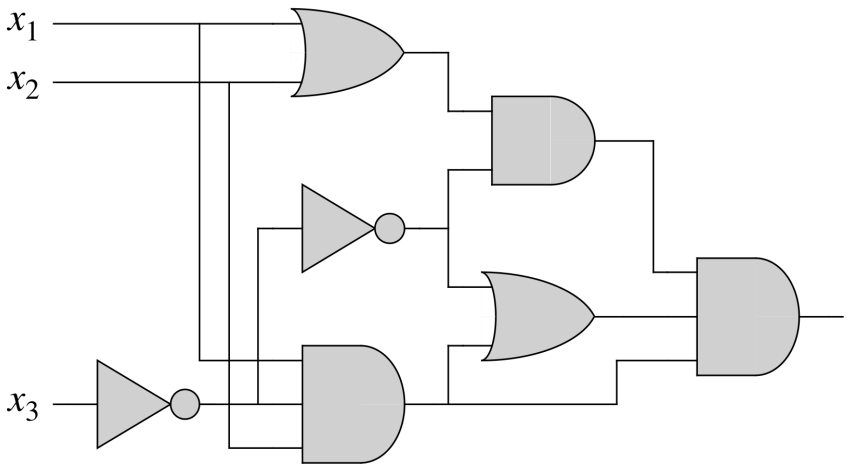

(b)

Unsatisfiable

CIRCUIT-SAT (3)

- To prove CIRCUIT-SAT to be NPC, need to show:
  1. CIRCUIT-SAT $\in$ NP; what is its certificate that we can use to confirm a "yes" in polynomial time?
  2. That any problem in NP reduces to CIRCUIT-SAT
- We'll skip the NP-hardness proof for #2, save to say that it leverages the existence of an algorithm that verifies certificates for some NP problem

Other NPC Problems

- We'll use the fact that CIRCUIT-SAT is NPC to prove that these other problems are as well:
  - SAT: Does boolean formula ϕ have a satisfying assignment?
  - 3-CNF-SAT: Does 3-CNF formula ϕ have a satisfying assignment?
  - CLIQUE: Does graph G have a clique (complete subgraph) of k vertices?
  - VERTEX-COVER: Does graph G have a vertex cover (set of vertices that touches all edges) of k vertices?
  - HAM-CYCLE: Does graph G have a hamiltonian cycle?
  - TSP: Does complete, weighted graph G have a hamiltonian cycle of total weight $\leq k$?
  - SUBSET-SUM: Is there a subset S' of finite set S of integers that sum to exactly a specific target value t?
- Many more in Garey & Johnson's book, with proofs

Other NPC Problems (2)

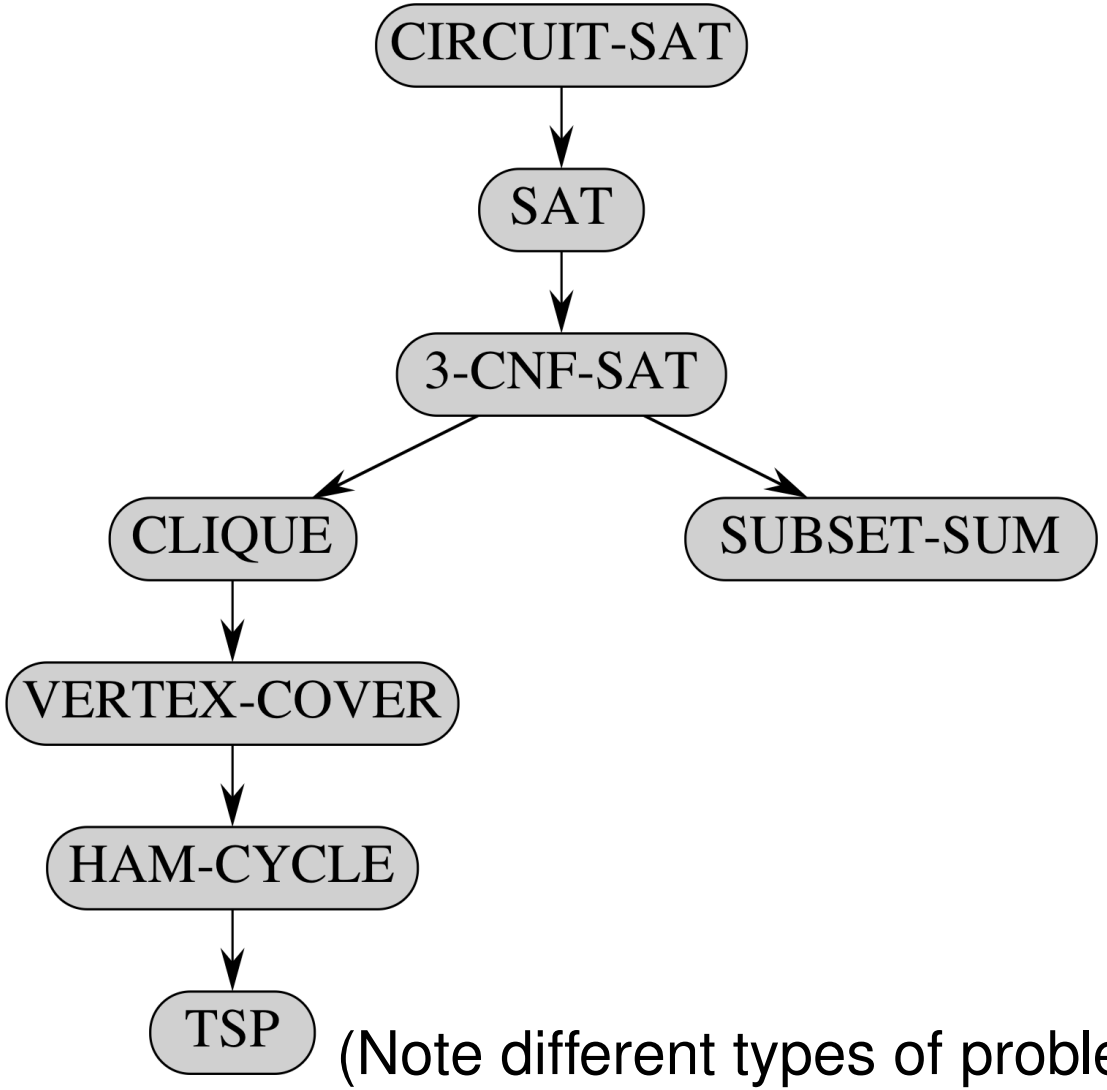

(Note different types of problems reducing to each other)

How to Prove a Problem B is NP-Complete

Important to follow every one of these steps!

1. Prove that the problem B is in NP
   - 1.1 Describe a certificate that can verify a "yes" answer
     - Often, the certificate is simple and obvious (but **not** merely the instance)
   - 1.2 Describe how the certificate is verified
   - 1.3 Argue that the verification takes polynomial time
2. Prove that the problem B is NP-hard
   - 2.1 Take **any** other NP-complete problem A and reduce it to B
     - Your reduction must transform **any** instance of A to **some** instance of B
   - 2.2 Prove that the reduction takes polynomial time
     - The reduction is an algorithm, so analyze it like any other
   - 2.3 Prove that the reduction is valid
     - I.e., the answer is "yes" for the instance of A if and only if the answer is "yes" for the instance of B
     - **Must** argue both directions: "if" and "only if"
     - Constructive proofs work well here, e.g., "Assume the instance of VERTEX-COVER (problem A) has a vertex cover of size $\leq k$. We will now construct from that a hamiltonian cycle in problem B."

NPC Problem: Formula Satisfiability (SAT)

- Given: A boolean formula ϕ consisting of
  1. n boolean variables $x_1, \ldots, x_n$
  2. m boolean connectives from $\wedge$, $\vee$, $\neg$, $\rightarrow$, and $\leftrightarrow$
  3. Parentheses
- Question: Is there an assignment of boolean values to $x_1, \ldots, x_n$ to make ϕ evaluate to 1?
- E.g.: $\phi = ((x_1 \rightarrow x_2) \vee \neg((\neg x_1 \leftrightarrow x_3) \vee x_4)) \wedge \neg x_2$ has satisfying assignment $x_1 = 0$, $x_2 = 0$, $x_3 = 1$, $x_4 = 1$ since

$$
\begin{aligned}
\phi &= ((0 \rightarrow 0) \vee \neg((\neg 0 \leftrightarrow 1) \vee 1)) \wedge \neg 0 \\
&= (1 \vee \neg((1 \leftrightarrow 1) \vee 1)) \wedge 1 \\
&= (1 \vee \neg(1 \vee 1)) \wedge 1 \\
&= (1 \vee 0) \wedge 1 \\
&= 1
\end{aligned}
$$

SAT is NPC

- **SAT is in NP:** ϕ's satisfying assignment certifies that the answer is "yes" and this can be easily checked in poly time by assigning the values to the variables and evaluating
- **SAT is NP-hard:** Will show CIRCUIT-SAT $\leq_{\mathsf{P}}$ SAT by reducing from CIRCUIT-SAT to SAT
- In reduction, need to map **any** instance (circuit) C of CIRCUIT-SAT to **some** instance (formula) ϕ of SAT such that C has a satisfying assignment if and only if ϕ does
- Further, the time to do the mapping must be polynomial in the size of the circuit (number of gates and wires), implying that ϕ's representation must be polynomially sized

SAT is NPC (2)

Define a variable in ϕ for each wire in C:

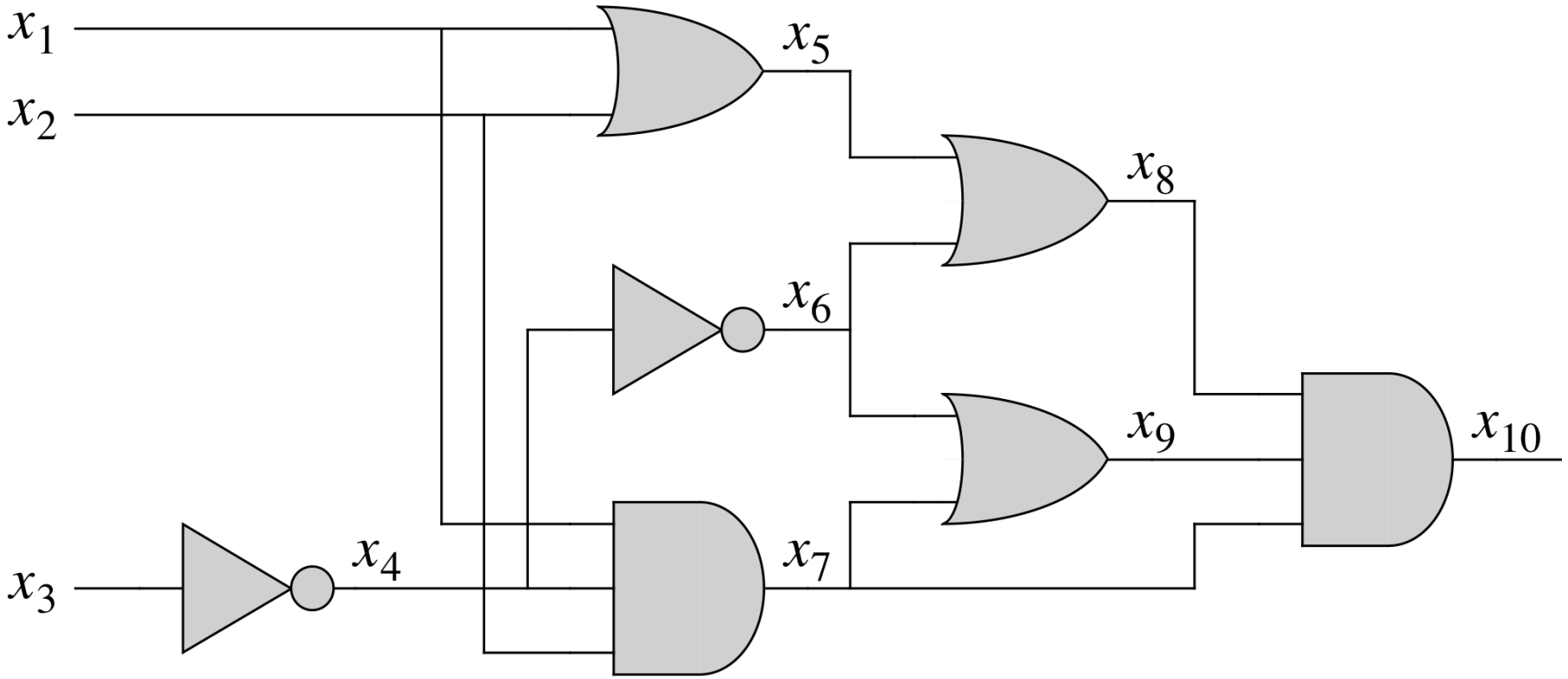

SAT is NPC (3)

- Then define a clause of ϕ for each gate that defines the function for that gate:

$$
\begin{aligned}
\phi = x_{10} \quad & \wedge \quad (x_4 \leftrightarrow \neg x_3) \\
& \wedge \quad (x_5 \leftrightarrow (x_1 \vee x_2)) \\
& \wedge \quad (x_6 \leftrightarrow \neg x_4) \\
& \wedge \quad (x_7 \leftrightarrow (x_1 \wedge x_2 \wedge x_4)) \\
& \wedge \quad (x_8 \leftrightarrow (x_5 \vee x_6)) \\
& \wedge \quad (x_9 \leftrightarrow (x_6 \vee x_7)) \\
& \wedge \quad (x_{10} \leftrightarrow (x_7 \wedge x_8 \wedge x_9))
\end{aligned}
$$

SAT is NPC (4)

- Size of ϕ is polynomial in size of C (number of gates and wires)

$\Rightarrow$ If C has a satisfying assignment, then the final output of the circuit is 1 and the value on each internal wire matches the output of the gate that feeds it

  - Thus, ϕ evaluates to 1

$\Leftarrow$ If ϕ has a satisfying assignment, then each of ϕ's clauses is satisfied, which means that each of C's gate's output matches its function applied to its inputs, and the final output is 1

- Since satisfying assignment for $C \Rightarrow$ satisfying assignment for ϕ and vice-versa, we get C has a satisfying assignment if and only if ϕ does

NPC Problem: 3-CNF Satisfiability (3-CNF-SAT)

- Given: A boolean formula that is in 3-conjunctive normal form (3-CNF), which is a conjunction of clauses, each a disjunction of 3 literals, e.g.,

  $$(x_1 \vee \neg x_1 \vee \neg x_2) \wedge (x_3 \vee x_2 \vee x_4) \wedge (\neg x_1 \vee \neg x_3 \vee \neg x_4) \wedge (x_4 \vee x_5 \vee x_1)$$

- Question: Is there an assignment of boolean values to $x_1, \ldots, x_n$ to make the formula evaluate to 1?

3-CNF-SAT is NPC

- **3-CNF-SAT is in NP:** The satisfying assignment certifies that the answer is "yes" and this can be easily checked in poly time by assigning the values to the variables and evaluating
- **3-CNF-SAT is NP-hard:** Will show SAT $\leq_{\mathsf{P}}$ 3-CNF-SAT
- Again, need to map **any** instance ϕ of SAT to **some** instance ϕ''' of 3-CNF-SAT
  1. Parenthesize ϕ and build its **parse tree**, which can be viewed as a circuit
  2. Assign variables to wires in this circuit, as with previous reduction, yielding ϕ', a conjunction of clauses
  3. Use the truth table of each clause ϕ'_i to get its DNF, then convert it to CNF ϕ''_i
  4. Add auxillary variables to each ϕ''_i to get three literals in it, yielding ϕ'''_i
  5. Final CNF formula is $\phi''' = \bigwedge_i \phi'''_i$

Building the Parse Tree

$$\phi = ((x_1 \to x_2) \vee \neg((\neg x_1 \leftrightarrow x_3) \vee x_4)) \wedge \neg x_2$$

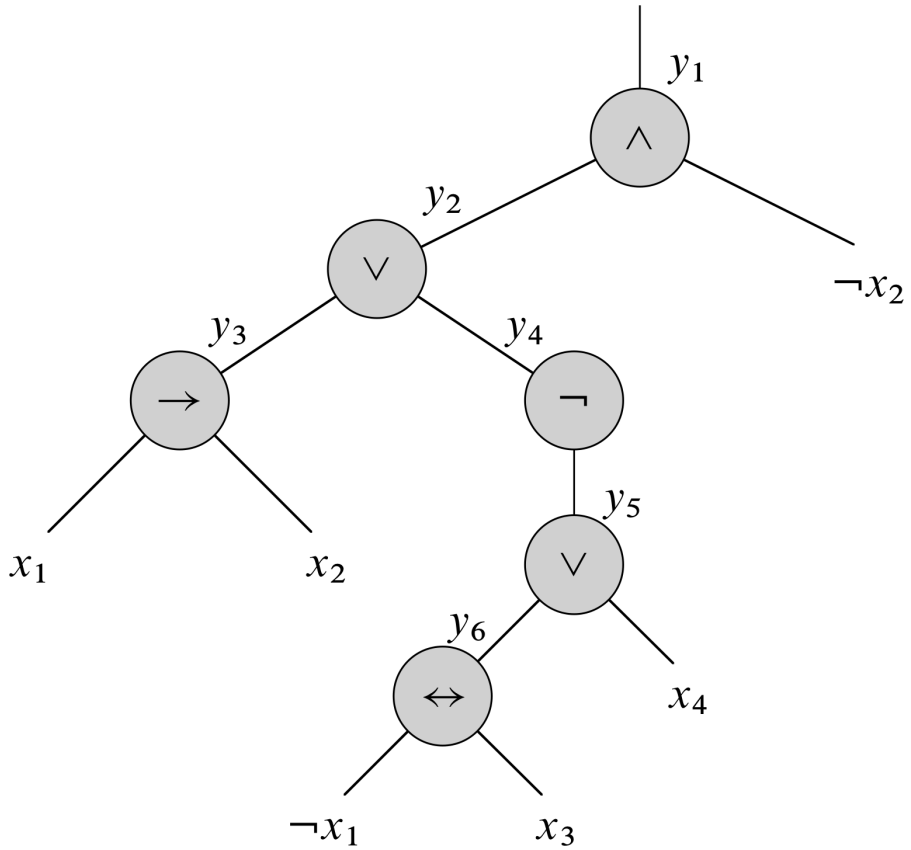

Might need to parenthesize ϕ to put at most two children per node

Assign Variables to wires

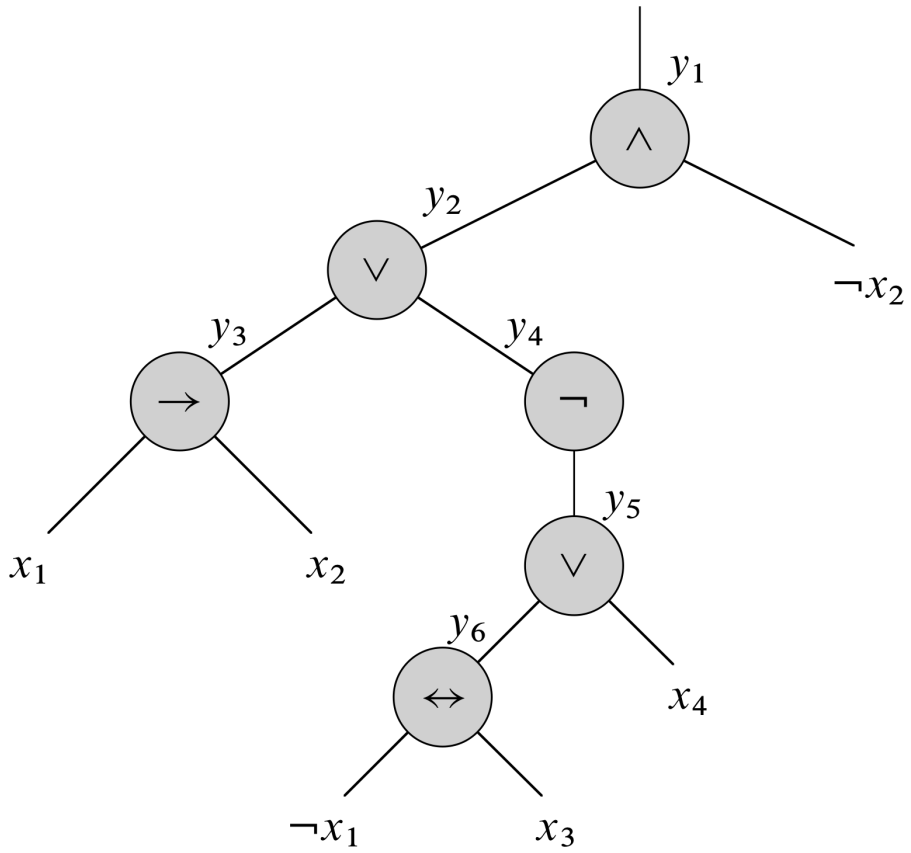

$$\phi' = y_1 \wedge (y_1 \leftrightarrow (y_2 \wedge \neg x_2)) \wedge (y_2 \leftrightarrow (y_3 \vee y_4)) \wedge (y_3 \leftrightarrow (x_1 \rightarrow x_2)) \wedge (y_4 \leftrightarrow \neg y_5) \wedge (y_5 \leftrightarrow (y_6 \vee x_4)) \wedge (y_6 \leftrightarrow (\neg x_1 \leftrightarrow x_3))$$

Convert Each Clause to CNF

- Consider first clause $\phi_1' = (y_1 \leftrightarrow (y_2 \wedge \neg x_2))$
- Truth table:

y_1	y_2	x_2	$(y_1 \leftrightarrow (y_2 \wedge \neg x_2))$
1	1	1	0
1	1	0	1
1	0	1	0
1	0	0	0
0	1	1	1
0	1	0	0
0	0	1	1
0	0	0	1

- Can now directly read off DNF of negation:

$$\neg\phi_1' = (y_1 \wedge y_2 \wedge x_2) \vee (y_1 \wedge \neg y_2 \wedge x_2) \vee (y_1 \wedge \neg y_2 \wedge \neg x_2) \vee (\neg y_1 \wedge y_2 \wedge \neg x_2)$$

- And use DeMorgan's Law to convert it to CNF:

$$\phi_1'' = (\neg y_1 \vee \neg y_2 \vee \neg x_2) \wedge (\neg y_1 \vee y_2 \vee \neg x_2) \wedge (\neg y_1 \vee y_2 \vee x_2) \wedge (y_1 \vee \neg y_2 \vee x_2)$$

Add Auxillary Variables

- Based on our construction, ϕ is satisfiable iff $\phi'' = \bigwedge_i \phi''_i$ is, where each ϕ''_i is a CNF formula each with at most three literals per clause
- But we need to have *exactly* three per clause!
- Simple fix: For each clause C_i of ϕ'',
  1. If C_i has three distinct literals, add it as a clause in ϕ'''
  2. If $C_i = (\ell_1 \vee \ell_2)$ for distinct literals ℓ_1 and ℓ_2, then add to ϕ''' $(\ell_1 \vee \ell_2 \vee p) \wedge (\ell_1 \vee \ell_2 \vee \neg p)$
  3. If $C_i = (\ell)$, then add to ϕ''' $(\ell \vee p \vee q) \wedge (\ell \vee p \vee \neg q) \wedge (\ell \vee \neg p \vee q) \wedge (\ell \vee \neg p \vee \neg q)$
- p and q are **auxillary variables**, and the combinations in which they're added result in an expression that is satisfied if and only if the original clause is

Proof of Correctness of Reduction

$\Leftrightarrow$ ϕ has a satisfying assignment iff ϕ''' does

1. CIRCUIT-SAT reduction to SAT implies satisfiability preserved from ϕ to ϕ'
2. Use of truth tables and DeMorgan's Law ensures ϕ'' equivalent to ϕ'
3. Addition of auxillary variables ensures ϕ''' is satisfiable iff ϕ'' is

- Constructing ϕ''' from ϕ takes polynomial time
  1. ϕ' gets variables from ϕ, plus at most one variable and one clause per operator in ϕ
  2. Each clause in ϕ' has at most 3 variables, so each truth table has at most 8 rows, so each clause in ϕ' yields at most 8 clauses in ϕ''
  3. Since there are only two auxillary variables, each clause in ϕ'' yields at most 4 in ϕ'''
  4. Thus size of ϕ''' is polynomial in size of ϕ, and each step easily done in polynomial time

NPC Problem: Clique Finding (CLIQUE)

- Given: An undirected graph $G = (V, E)$ and value k
- Question: Does G contain a clique (complete subgraph) of size k?

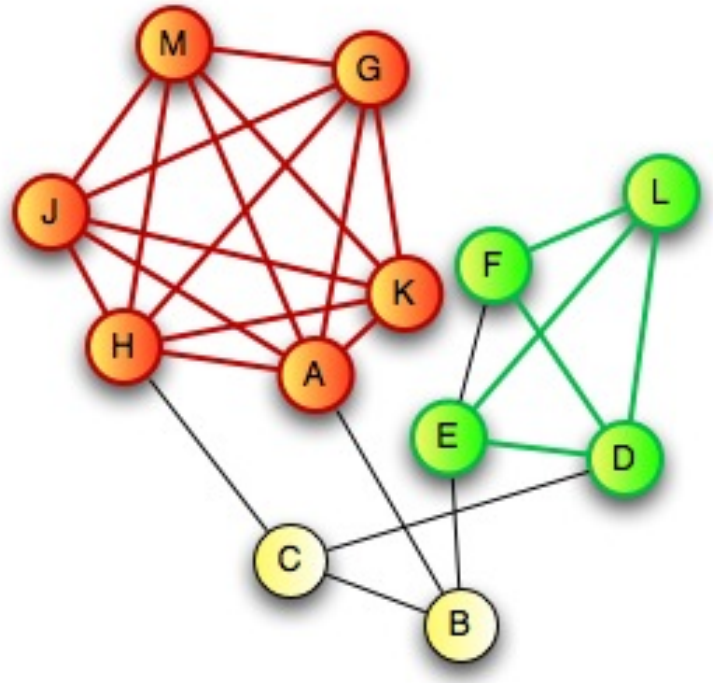

Has a clique of size $k = 6$, but not of size 7

CLIQUE is NPC

- **CLIQUE is in NP:** A list of vertices in the clique certifies that the answer is "yes" and this can be easily checked in poly time (how?)
- **CLIQUE is NP-hard:** Will show 3-CNF-SAT $\leq_{\mathsf{P}}$ CLIQUE by mapping **any** instance $\langle \phi \rangle$ of 3-CNF-SAT to **some** instance $\langle G, k \rangle$ of CLIQUE
  - Seems strange to reduce a boolean formula to a graph, but we will show that ϕ has a satisfying assignment iff G has a clique of size k
  - Caveat: the reduction merely preserves the iff relationship; it does not try to directly solve either problem, nor does it assume it knows what the answer is

The Reduction

- Let $\phi = C_1 \wedge \cdots \wedge C_k$ be a 3-CNF formula with k clauses
- For each clause $C_r = (\ell_1^r \vee \ell_2^r \vee \ell_3^r)$ put vertices v_1^r, v_2^r, and v_3^r into V
- Add edge (v_i^r, v_j^s) to E if:
  1. $r \neq s$, i.e., v_i^r and v_j^s are in separate triples
  2. ℓ_i^r is not the negation of ℓ_j^s
- Obviously can be done in polynomial time

The Reduction (2)

$\phi = (x_1 \vee \neg x_2 \vee \neg x_3) \wedge (\neg x_1 \vee x_2 \vee x_3) \wedge (x_1 \vee x_2 \vee x_3)$
Satisfied by $x_2 = 0$, $x_3 = 1$

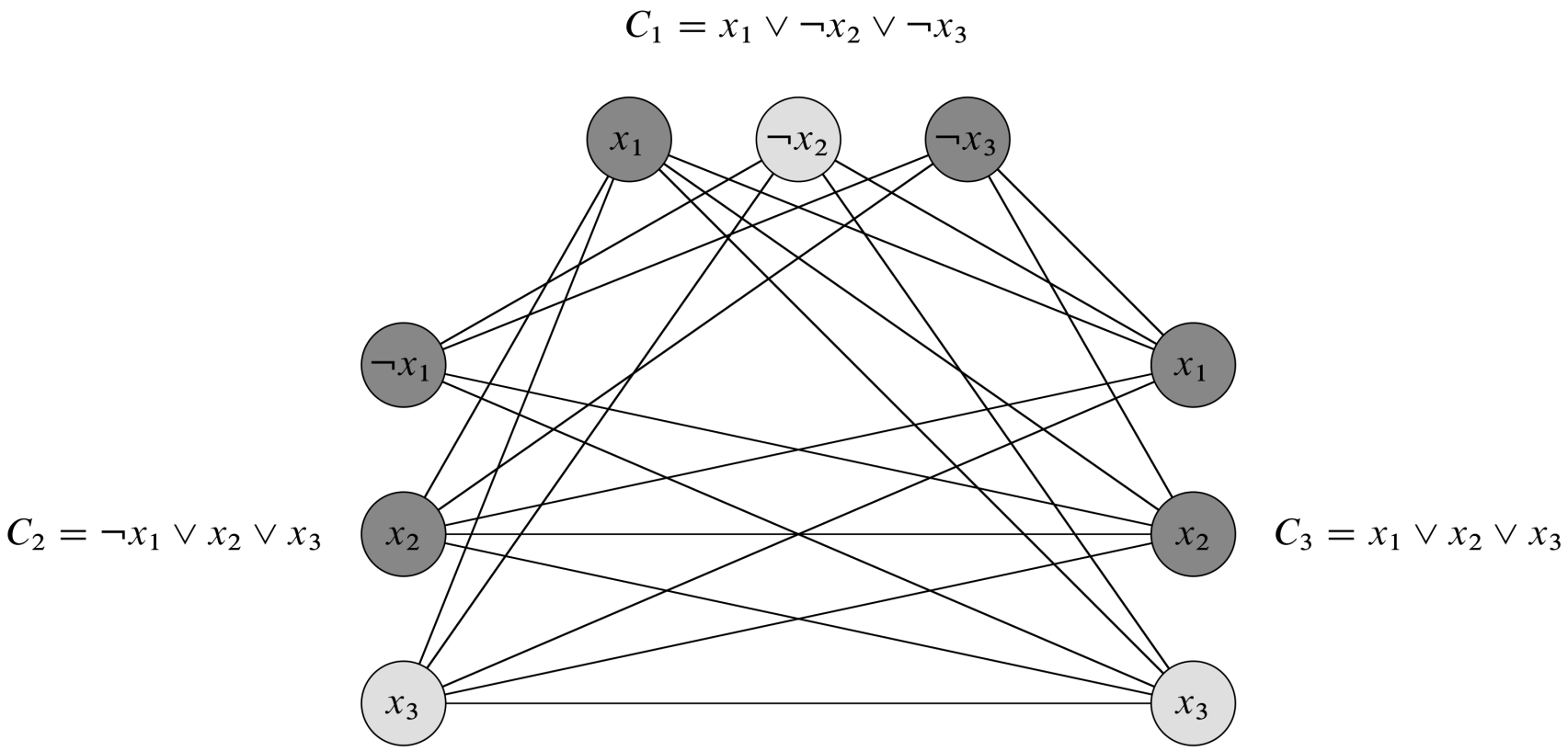

The Reduction (3)

$\Rightarrow$ If ϕ has a satisfying assignment, then at least one literal in each clause is true

- Picking corresponding vertex from a true literal from each clause yields a set V' of k vertices, each in a distinct triple
- Since each vertex in V' is in a distinct triple and literals that are negations of each other cannot both be true in a satisfying assignment, there is an edge between each pair of vertices in V'
- V' is a clique of size k

$\Leftarrow$ If G has a size-k clique V', can assign 1 to corresponding literal of each vertex in V'

- Each vertex in its own triple, so each clause has a literal set to 1
- Will not try to set both a literal and its negation to 1
- Get a satisfying assignment

NPC Problem: Vertex Cover Finding (VERTEX-COVER)

- A vertex in a graph is said to **cover** all edges incident to it
- A **vertex cover** of a graph is a set of vertices that covers all edges in the graph
- Given: An undirected graph $G = (V, E)$ and value k
- Question: Does G contain a vertex cover of size k?

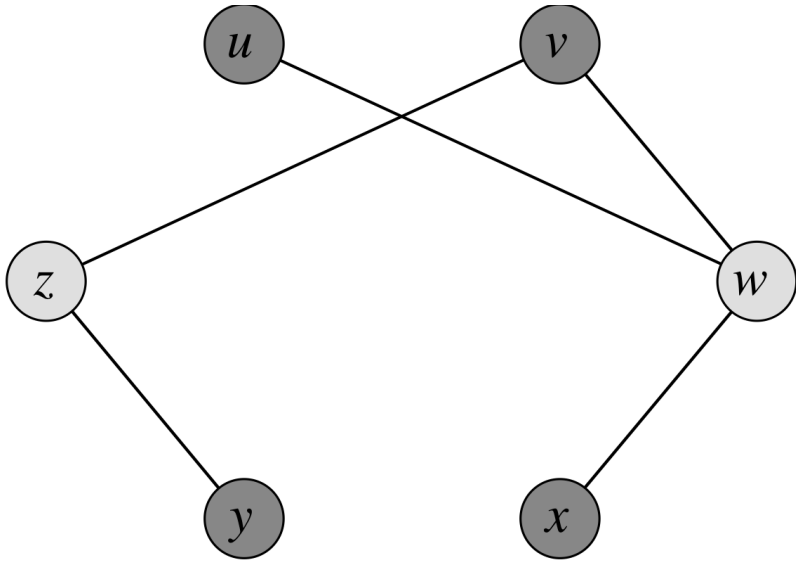

Has a vertex cover of size $k = 2$, but not of size 1

VERTEX-COVER is NPC

- **VERTEX-COVER is in NP:** A list of vertices in the vertex cover certifies that the answer is "yes" and this can be easily checked in poly time
- **VERTEX-COVER is NP-hard:** Will show CLIQUE $\leq_{\mathsf{P}}$ VERTEX-COVER by mapping *any* instance $\langle G, k \rangle$ of CLIQUE to *some* instance $\langle G', k' \rangle$ of VERTEX-COVER
- Reduction is simple: Given instance $\langle G = (V, E), k \rangle$ of CLIQUE, instance of VERTEX-COVER is $\langle \overline{G}, |V| - k \rangle$, where $\overline{G} = (V, \overline{E})$ is G's **complement**:

$$\overline{E} = \{(u, v) : u, v \in V, u \neq v, (u, v) \notin E\}$$

- Easily done in polynomial time
- Again, note that we are **not** solving the CLIQUE instance $\langle G, k \rangle$, merely transforming it to an instance of VERTEX-COVER

VERTEX-COVER is NPC (2)

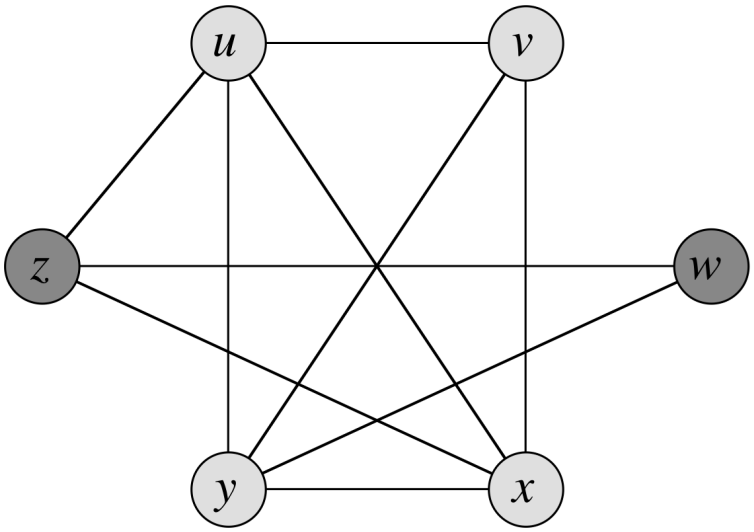

(a)

G

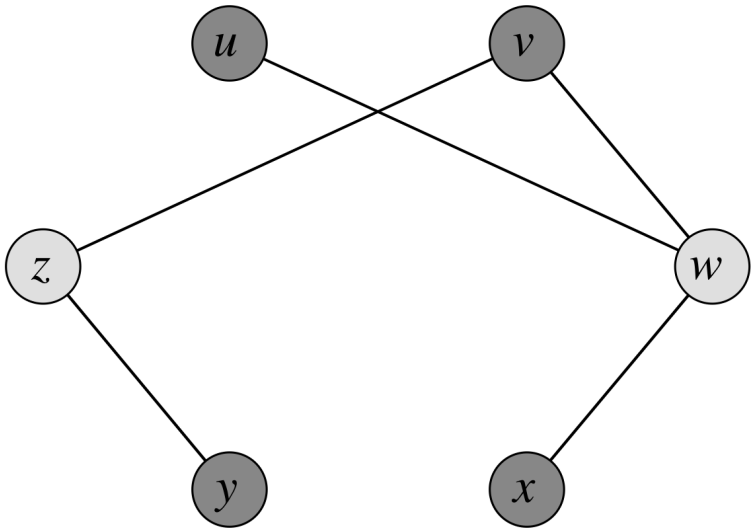

(b)

$\overline{G}$

Proof of Correctness

$\Rightarrow$ Assume G has a size-k clique $C' \subseteq V$

- Consider edge $(z, v) \in \overline{E}$
- If it's in $\overline{E}$, then $(z, v) \notin E$, so at least one of z and v (which cover (z, v)) is not in C', so at least one of them is in $V \setminus C'$
- This holds for each edge in $\overline{E}$, so $V \setminus C'$ is a vertex cover of $\overline{G}$ of size $|V| - k$

$\Leftarrow$ Assume $\overline{G}$ has a size-$(|V| - k)$ vertex cover $V' \subseteq V$

- For each $(z, v) \in \overline{E}$, at least one of z and v is in V'
  - I.e., $(z, v) \in \overline{E} \Rightarrow (z \in V') \vee (v \in V')$
- By contrapositive, $\neg((z \in V') \vee (v \in V')) \Rightarrow (z, v) \notin \overline{E}$
  - I.e., if both $u, v \notin V'$, then $(u, v) \in E$
- Since every pair of nodes in $V \setminus V'$ has an edge between them in G, $V \setminus V'$ is a clique of size $|V| - |V'| = k$ in G

NPC Problem: Subset Sum (SUBSET-SUM)

- Given: A finite set S of positive integers and a positive integer **target** t
- Question: Is there a subset $S' \subseteq S$ whose elements sum to t?
- E.g., $S = \{1, 2, 7, 14, 49, 98, 343, 686, 2409, 2793, 16808, 17206, 117705, 117993\}$ and $t = 138457$ has a solution $S' = \{1, 2, 7, 98, 343, 686, 2409, 17206, 117705\}$

SUBSET-SUM is NPC

- **SUBSET-SUM is in NP:** The subset S' certifies that the answer is "yes" and this can be easily checked in poly time (how?)
- **SUBSET-SUM is NP-hard:** Will show 3-CNF-SAT $\leq_{\mathsf{P}}$ SUBSET-SUM by mapping **any** instance ϕ of 3-CNF-SAT to **some** instance $\langle S, t \rangle$ of SUBSET-SUM
- Make two reasonable assumptions about ϕ:
  1. No clause contains both a variable and its negation
  2. Each variable appears in at least one clause

The Reduction

- Let ϕ have k clauses $C_1, \ldots, C_k$ over n variables $x_1, \ldots, x_n$
- Reduction creates two numbers in S for each variable x_i and two numbers for each clause C_j
- Each number has $n + k$ digits, the most significant n tied to variables and least significant k tied to clauses
  1. Target t has a 1 in each digit tied to a variable and a 4 in each digit tied to a clause
  2. For each x_i, S contains integers v_i and v_i', each with a 1 in x_i's digit and 0 for other variables. Put a 1 in C_j's digit for v_i if x_i in C_j, and a 1 in C_j's digit for v_i' if $\neg x_i$ in C_j
  3. For each C_j, S contains integers s_j and s_j', where s_j has a 1 in C_j's digit and 0 elsewhere, and s_j' has a 2 in C_j's digit and 0 elsewhere
- Greatest sum of any digit is 6, so no carries when summing integers
- Can be done in polynomial time

The Reduction (2)

$$C_1 = (x_1 \vee \neg x_2 \vee \neg x_3),\ C_2 = (\neg x_1 \vee \neg x_2 \vee \neg x_3),$$
$$C_3 = (\neg x_1 \vee \neg x_2 \vee x_3),\ C_4 = (x_1 \vee x_2 \vee x_3)$$

		x_1	x_2	x_3	C_1	C_2	C_3	C_4
v_1	=	1	0	0	1	0	0	1
v_1'	=	1	0	0	0	1	1	0
v_2	=	0	1	0	0	0	0	1
v_2'	=	0	1	0	1	1	1	0
v_3	=	0	0	1	0	0	1	1
v_3'	=	0	0	1	1	1	0	0
s_1	=	0	0	0	1	0	0	0
s_1'	=	0	0	0	2	0	0	0
s_2	=	0	0	0	0	1	0	0
s_2'	=	0	0	0	0	2	0	0
s_3	=	0	0	0	0	0	1	0
s_3'	=	0	0	0	0	0	2	0
s_4	=	0	0	0	0	0	0	1
s_4'	=	0	0	0	0	0	0	2
t	=	1	1	1	4	4	4	4

$$x_1 = 0,\ x_2 = 0,\ x_3 = 1$$

Proof of Correctness

$\Rightarrow$ If $x_i = 1$ in ϕ's satisfying assignment, SUBSET-SUM solution S' will have v_i, otherwise v_i'

- For each variable-based digit, the sum of the elements of S' is 1
- Since each clause is satisfied, each clause contains at least one literal with the value 1, so each clause-based digit sums to 1, 2, or 3
- To match each clause-based digit in t, add in the appropriate subset of **slack variables** s_i and s_i'

Proof of Correctness (2)

$\Leftarrow$ In SUBSET-SUM solution S', for each $i = 1, \ldots, n$, exactly one of v_i and v_i' must be in S', or sum won't match t

- If $v_i \in S'$, set $x_i = 1$ in satisfying assignment, otherwise we have $v_i' \in S'$ and set $x_i = 0$
- To get a sum of 4 in clause-based digit C_j, S' must include a v_i or v_i' value that is 1 in that digit (since slack variables sum to at most 3)
- Thus, if $v_i \in S'$ has a 1 in C_j's position, then x_i is in C_j and we set $x_i = 1$, so C_j is satisfied (similar argument for $v_i' \in S'$ and setting $x_i = 0$)
- This holds for all clauses, so ϕ is satisfied

In-Class Exercise: Traveling Salesman Problem (TSP)

- Given: A complete, undirected graph G with nonnegative costs on its edges, and a number k
- Question: Is there a tour that visits every city (vertex) exactly once, finishing where it started, and has total cost $\leq k$?

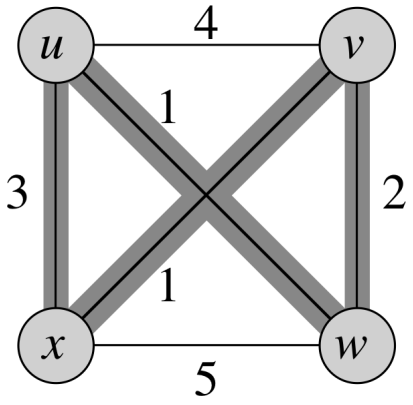

Has a tour of cost $k = 7$

Prove that TSP is NP-complete (*Reduce from HAM-CYCLE, realizing that HAM-CYCLE's instance is a graph with no costs and not necessarily complete*)