University of Nebraska Lincoln

Pioneering new frontiers.

Bachelor of Science in

Computer Engineering

Advising Brochure

2014 – 2015

Department of

Computer Science & Engineering
College of Engineering

256 Avery Hall

advising@cse.unl.edu
http://cse.unl.edu/advising

The B.S. Degree in Computer Engineering is accredited by the Engineering Accreditation Commission of ABET.
http://www.abet.org

rev: June 10, 2014

Computer Engineering Program – 126 hours

Course	Title	RAIK	Hrs
Computer Science & Engineering Courses:			
CSCE 10	CSE Freshman Seminar		0
CSCE 155, 156	Intro to Comp Sci I,II	183,184	7
CSCE 230	Computer Organization	284	4
CSCE 235	Introduction to Discrete Struct	(283)	3
CSCE 236	Intro to Embedded Systems		3
CSCE 251	Unix Programming		1
CSCE 310	Data Structures & Algos	283	3
CSCE 335/ELEC 370	Digital Logic Design		3
CSCE 340	Numerical Analysis I		3
CSCE 351	Operating System Kernels		3
CSCE 361	Intro to Software Engineering	383	3
CSCE 462	Communication Networks		3
CSCE 488/ELEC 494	CE Professional Development	381	3
CSCE 489/ELEC 495	CE Senior Design Project	402?	3
			42
Electrical Engineering Courses:			
ELEC 215, 235	Electronics & Circuits I, Lab		4
ELEC 216, 236	Electronics & Circuits II, Lab		4
ELEC 304	Cont Time Signals & Systems		3
ELEC 305	Probability Theory		3
ELEC 316	Electronics & Circuits III		3
			17
Mathematics Courses:			
MATH 106, 107, 208	Analytic Geom & Calc I,II,III		13
MATH 221	Differential Equations		3
MATH 314	Linear Alg (Matrix Theory)		3
			19
Other Supporting Courses:			
PHYS 211, 212	General Physics I,II		8
one of CHEM 109 or	General Chemistry		4
PHYS 213 & lab	General Physics III & any lab		or 5
JGEN 200 and 300	Technical Comm I,II	287/8,187/8	3+3
or COMM 286	Bus. & Prof. Comm		or 3
ENGR 20	Soph Engr Seminar		0
CSCE/ELEC	Technical Electives	301/401,DM,MAS	15
	Free Elective		3 or 2
ACE	LO's 5, 6, 7, 9	182,282	12
			48

Formal Admission to Computer Engineering

- Between 43-61 hours applying to the degee
- 2.500+ previous semester and cumulative GPA
- C+ or higher in MATH through 208
- C+ or higher in PHYS through 212
- C+ or higher in ELEC through 215/235
- C+ or higher in CSCE through 125, 230, 235 (or RAIK 183, 184, 283)
- Automatic for qualifying students

Technical Electives Requirements - 15 hours

Technical Electives include the following:

- any Focus course
- any 300+ level non-required CSCE excepting 390 and 490
- any 300+ level non-required ELEC
- any 300+ level RAIK (if equivalent to CSCE)

Technical Electives constraints:

I. ≥ 9 hours of CSCE and/or equivalent RAIK
II. ≥ 6 hours lecture-based
III. ≤ 6 hours practicum/internship
IV. ≤ 3 hours independent study
V. ≥ 9 hours 400-level

9+ hours in one Focus area with minimum C grade qualifies as a **Focus**.

15+ hours in one Focus area with minimum C grade qualifies for waiver of preceding Technical Electives constraints.

ACE Student Learning Outcomes - 12 hours

- Maximum of 9 hrs in any one department for ACE 4-10.
- Asterisk (*) indicates those not built into the major.
- See http://ace.unl.edu/ for details and listings.

1.	Written Communication	JGEN 200, RAIK 287/288
2.	Oral Communication	COMM 286, JGEN 300, RAIK 187/188
3.	Math & Computation	CSCE 155, RAIK 183
4.	Natural Sciences	CHEM 109, PHYS 211/212
5.*	Humanities/History	3 hours elective
6.*	Social Sciences	3 hours elective or RAIK 182
7.*	Fine Arts	3 hours elective or DSGN 110
8.	Ethics	CSCE 488, RAIK 282
9.*	Human Diversity	3 hours elective
10.	Integrated Knowledge	CSCE 489, RAIK 402, ELEC 495

Careful: ELEC 494 does NOT substitute for CSCE 488 to meet ACE 8 requirement!

Computer Engineering Focus Areas - 9-15 hours

Embedded Systems and Robotics

		Course Title	Frequency
CSCE	430	Computer Architecture	f
	436	Embedded Systems	s
	438	Sensor Networks	fe
	439	Robotics: Algos & Appls **OR**	fo
	476	Intro AI	s+f15
ELEC	479	Data Sys Org and Design	??
MECH	453	Robotics: Kinematics & Design	fs

VLSI Design

		Course Title	Frequency
ELEC	416	Mat & Dev for Comp Mem/Log/Disp	
	421	Princ of Semiconductor Mat & Def	f
	475	Digital Systems	s
CSCE	430	Computer Architecture	f
	434	VLSI Design **OR**	so
ELEC	470	Digital & Analog VLSI Design	s
		(Phys 213/223 also required)	fs

Signal Processing & Communications

		Course Title	Frequency
ELEC	462	Communication Systems	f
	463	Digital Signal Processing	f
	464	Digital Comm Systems	so
	465	Intro to Data Compression	s
CSCE	438	Sensor Networks	fe
	463	Data and Net Security	se
	472	Digital Image Processing	f
	473	Computer Vision	so

High Performance Computing

		Course Title	Frequency
CSCE	430	Computer Architecture	f
	432	High-Performance Processor Architectures	se
	435	Cluster & Grid Computing	fo
	437	File & Storage Systems	so
	455	Distributed Operatings Systems	s17
	456	Parallel Algorithms & Programming	fe

- The Focus is optional and can be customized.
- Grade of C or higher is required for a Focus.
- Underlining means course is required for the Focus.

Computer Science Technical Electives

		Course Title	Frequency
CSCE	322	Programming Language Concepts	fssu
	378	Human-Computer Interaction	s
	399H	Honors Research (Ind Study)	fssu
	413	Database Systems	fe
	421	Foundations of Constraint Sat Th	fe+so
	423	Design & Analysis of Algorithms	s+fo
	424	Computational Complexity Th	s16
	425	Compiler Construction	s
	428	Automata, Computation and Formal Lang	f+so
	430	Computer Architecture	f
	432	High-Performance Comp Archs	se
	434	VLSI Design	so
	435	Cluster & Grid Computing	fo
	436	Advanced Embedded Systems	s
	437	File & Storage Systems	so
	438	Sensor Networks	fe
	439	Robotics	fo
	441	Approximation of Functions	?
	447	Numerical Analysis II	so?
	451	Operating System Principles	s
	455	Distributed Operating Systems	s17
	456	Parallel Algo's and Programming	fe
	457	Systems Administration	fe
	463	Data & Network Security	se
	464	Internet Systems & Prog	f+s15
	470	Computer Graphics	f
	471	Bioinformatics	so
	472	Digital Image Processing	f
	473	Computer Vision	so
	474	Data Mining	se
	475	Multiagent Systems	fo
	476	Artificial Intelligence	s+f15
	477	Cryptography & Comp Security	f+s15
	478	Machine Learning	fe
	491	Internship (practicum)	fssu
	493	ILab Project (practicum)	fssu
	496	Special Topics (varies)	fs
	498	Computer Problems (Ind Study)	fssu

Raikes School Technical Electives

		Course Title	Frequency
RAIK	378H	Human-Computer Interaction	s
	DS	301H, 302H, 401H, 402H	fsfs

Note: RAIK 402H may qualify to substitute for Senior Design CSCE 489, in which case it can not double-dip as technical elective.

Electrical Engineering Technical Electives

EE Opt		Course Title	Frequency
	306	Electromag Field Theory	fs
	307	Elect Engr Lab I	fs
	317	Elect Engr Lab 2	fs
ECE	361	Adv Electronics & Circ	s
	399H	Undergraduate Research (Ind Study)	fs
eps	406	Power Systems Analysis	f14
	407	Power Systems Planning	f13
EFO	408	Engineering Electromagnetics	f
csp	410	Multivariate Random Processes	fo
md	417	Semiconductor Fundamentals II	s
md	420	Plasma Semiconductors	f
MD	421	Principles of Semiconductors	f
md	422	Intro to Phys & Chem of Solids	?
EPS	428	Power Electronics	f
eps	430	Wind Energy	f
EPS	438	Electric Power Engineering	s
	442	Analytical Techniques	s
eps	444	Linear Control Systems	f
BIO	452	Bioinformatics	f
bio	460	LabView Programming	s
CSP	462	Communication Systems	f
CSP	463	Digital Signal Processing	f
csp	464	Digital Communication Systems	so
csp	465	Intro Data Compression	se
efo	467	Electromag Theory & Appl	?
efo	468	Microwave Engineering	?
ece	469	Analogue Integrated Circuits	f
ece	470	Digital & Analogue VLSI Design	s
ECE	475	Digital Systems	s
efo	480	Lasers & Laser Applications	fe
efo	486,L	Applied Photonics	fo
bio	498	Special Topics (E & S: f14)	fs

Electrical Engineering Dual Matriculation

Add the Following Courses:	**hrs**
Two of CHEM 109, PHYS 213, LIFE 120/121	4
PHYS 222, ELEC 306, 307, 317, 222 or CSCE 236	8
Choice ELEC 494/495 or CSCE 488/489	0
EE Option (formula) 12 hrs from list	6

UPPER case: 3, EiThEr case: 3, Other Option: 3, Any EE: 3

Electrical Engineering Major Options

CSP/csp	-	Communications & Signal Processing
EFO/efo	-	Electromagnetic Fields & Optics
ECE/ece	-	Electronics & Computer Engineering
EPS/eps	-	Energy & Power Systems
MD/md	-	Materials & Devices
BIO/bio	-	Bioengineering

Computer Science Dual Matriculation?

Add the Following Courses:	**hrs**
CSCE 322 as a Technical Elective	0
CSCE 423 or 428 as a Technical Elective	0
second PHYS lab or CHEM 110	1-4
CDR A (ACE 1) or ENGL 150 & 151	3
CDR C (Hum/Hist)	3
CDR D (Soc Sci)	3
	10+

But $120 + 30 = 150$ hrs needed for Dual Matriculation
means $150 - 126 - 10+ =$ up to 14 more open hours.
Suggest also add Physics minor and/or Math major.

Dual Matriculation forms are available at the Advising Office, W204 Nebraska Hall.

Engineering Mathematics Minor

The minor includes MATH 106, 107, 208, 221 plus 12 advanced hours. Computer Engineering already includes MATH 314 and MATH 340 (cross-listed as CSCE 340). Simply add two more math courses.

Adding a minor can be done at the Advising Office, W204 Nebraska Hall.

Recent Changes

Fall 2009 through Fall 2010: ACE General Studies formula was instituted, replacing the old ES/IS. Technical Elective hours totaled just 9. Required courses included CSCE 430, ELEC 307, 361, and 475, which will become electives in Fall 2011. CSCE 236 was not yet created.

Fall 2011: Required courses were reduced, CSCE 236 added, and Technical Elective hours increased to 15. Technical Elective hours were not restricted by type such as ELEC, Raikes Design Studio, etc., but the choices from ELEC were limited to just eight that were considered most relevant, and a few theory oriented CSCE courses were also not included.

Fall 2012 through present: Technical Elective hours become constrained by type, but choices are opened up to virtually any non-required upper-level courses in ELEC and CSCE.

By default students use the bulletin year under which they came to UNL. Changing to a more recent year (during which they were full time) can be easily done. Make request through Chief Undergraduate Adviser to the Dean's Office.

Example Eight Semester Schedule - 126 hours

Fall 1				Spring 1			
CSCE	155E	CS I	3	CSCE	156	CS II	4
MATH	106	Calc I	5	CSCE	235	Discrete	3
PHYS	211	Gen Phys I	4	CSCE	251	Unix	1
		ACE 5	3	MATH	107	Calc II	4
CSCE	10	Seminar	0	PHYS	212	Gen Phys II	4
			15				16
Fall 2				**Spring 2**			
CSCE	230	Comp Org	4	CSCE	236	Intr Em Sys	3
MATH	208	Calc III	4	CSCE	310	Algos	3
CHEM	109	Gen Chem	4	MATH	221	Diff Eq	3
ELEC	215,235	Elec Circ I	4	ELEC	216,236	Circuit II	4
ENGR	020	Seminar	0	JGEN	200	Tech Comm I	3
			16				16
Fall 3				**Spring 3**			
CSCE	351	Op Sys Ker	3	CSCE	335	Dig Logic	3
CSCE	361	Soft Engr	3	CSCE	462	Comm Net	3
ELEC	304	Sig & Sys	3	MATH	314	Linear Alg	3
ELEC	316	Circuit III	3	ELEC	305	Prob Th	3
		ACE 6	3	CS/EE		Tech Elec	3
			15				15
Fall 4				**Spring 4**			
CSCE	340	Num Anal	3	CSCE	489	CE Sr Des	3
CS/EE		Tech Elec	3	CS/EE		Tech Elec	3
CSCE	488	CE Prof	3	CS/EE		Tech Elec	3
JGEN	300	Tech Comm II	3	CS/EE		Tech Elec	3
		ACE 7	3			ACE 9	3
		free elective	3				15
			18				

Departmental Advising:

http://cse.unl.edu/advising

Charles Riedesel (Chief Undergraduate Adviser)

259 Avery Hall, 472-3486, chuckr@unl.edu

Chris Bourke (Undergraduate Adviser)

363 Avery Hall, 472-5008, cbourke@cse.unl.edu

Ryan Patrick (Undergraduate Adviser)

365 Avery Hall, 472-5089, rypat@unl.edu

General College Advising:

Engineering Library, W204 Nebraska Hall, 472-7072

http://engineering.unl.edu/current-undergraduate/index.shtml

Computer Science Placement see http://cse.unl.edu/cse−placement−exam/
Math Placement see http://www.math.unl.edu/resources/undergraduate/mpe/

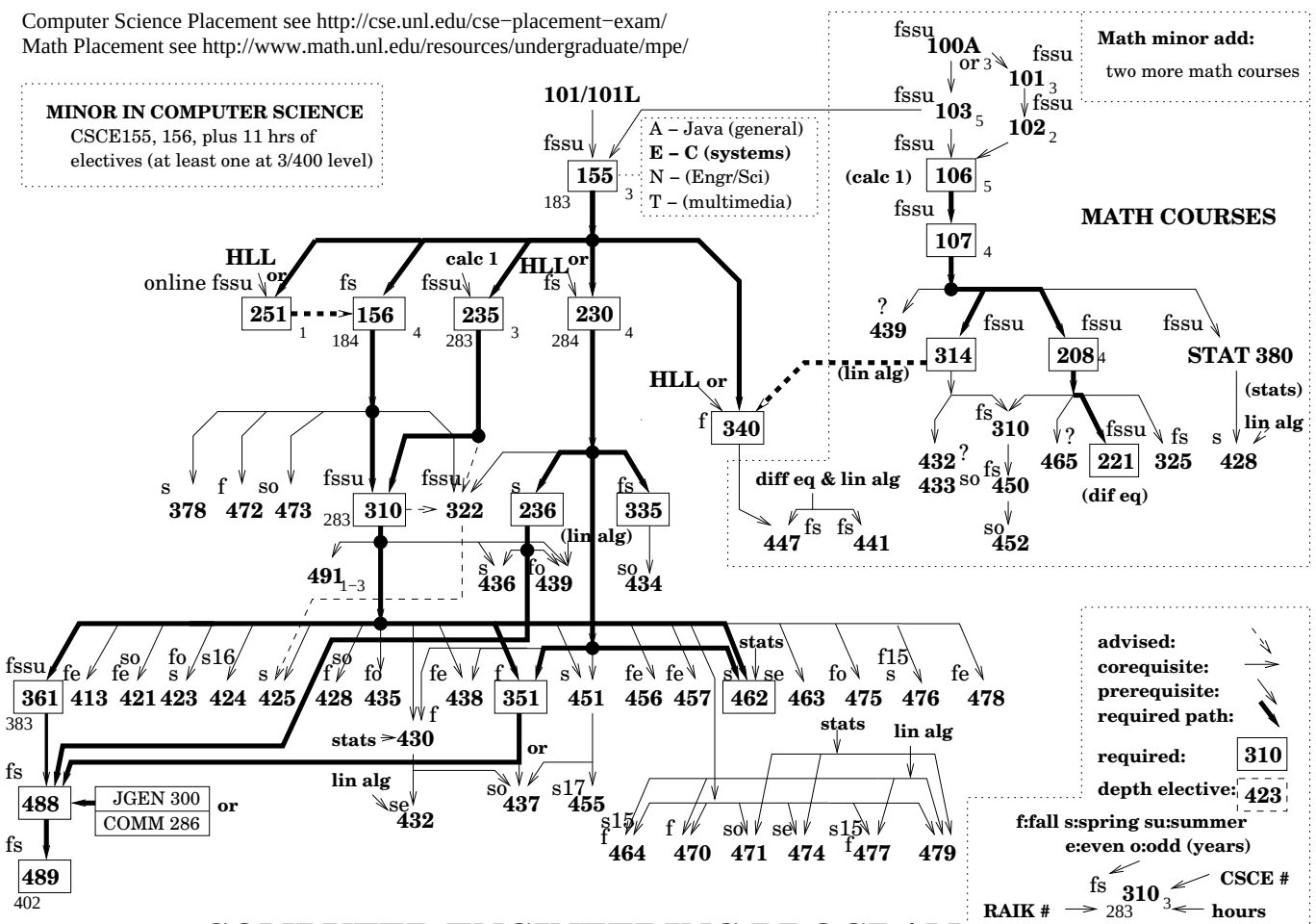

COMPUTER ENGINEERING PROGRAM
Computer Science & Engineering and Supporting Courses

rev 6/10/2014

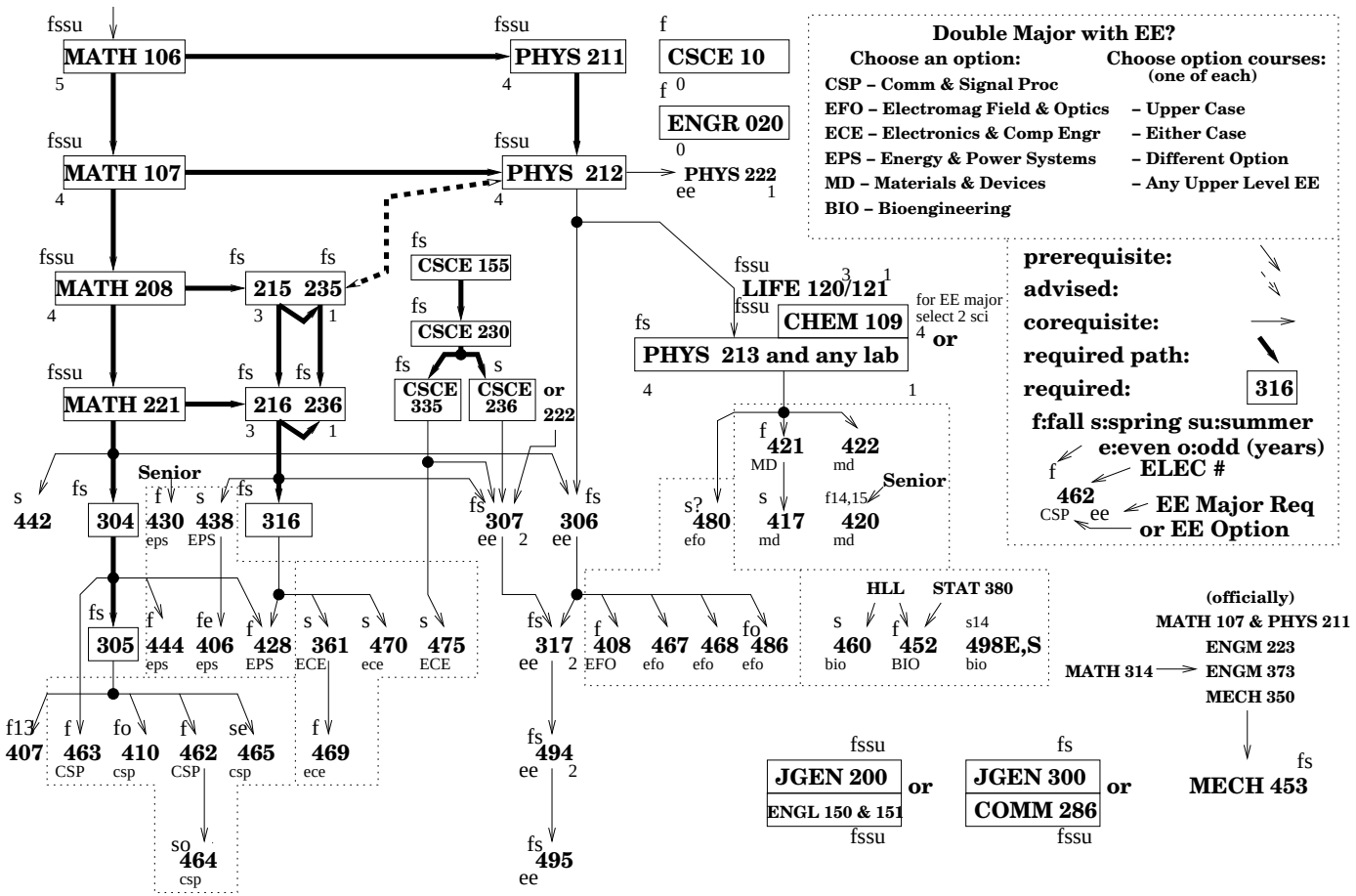

COMPUTER ENGINEERING PROGRAM
Electrical Engineering and Supporting Courses

rev 06/05/2014